Roll No. .....

TMS–401

B. TECH. (MECHANICAL ENGINEERING)
(FOURTH SEMESTER)
END SEMESTER EXAMINATION, June, 2023

MANUFACTURING EXECUTION SYSTEM

Time : Three Hours

Maximum Marks : 100

Note : (i) All questions are compulsory.

(ii) Answer any *two* sub-questions among (a), (b) and (c) in each main question.

(iii) Total marks in each main question are **twenty**.

(iv) Each sub-question carries 10 marks.

1. (a) Describe in detail about the concept of 'Tomorrow's Manufacturing'. Also discuss in detail about Tomorrow's Manufacturing Plant. (CO1)

(b) Differentiate between Job Production system and Batch Production system. Also state the advantages of both the systems. (CO1)

(c) Differentiate between short-term, medium-term and long-term planning horizons with suitable examples. (CO1)

2. (a) Discuss in detail about the concept of Enterprise Integration. Also state different types of integration involved in Enterprise Integration.

(CO1/CO3)

P. T. O.

(b) Discuss in detail about the concept of Material Requirement Planning (MRP) with suitable example. (CO1/CO3)

(c) What do you understand by the term Manufacturing Process Management (MPM) ? Also state its benefits. (CO1/CO3)

3. (a) Explain in detail about the concept of Advanced Manufacturing Adoption with suitable activities involved in it. (CO2/CO3/CO4)

(b) Describe in detail about the concept of Enterprise Resource Planning (ERP). Also discuss different modules associated with ERP systems. (CO2/CO3/CO4)

(c) Describe in detail the concept of Internet of Things (IoT) along with its benefits. (CO2/CO3/CO4)

4. (a) Discuss in detail about the concept of Industry 4.0 along with suitable challenges associated with it. (CO3/CO4/CO5)

(b) Discuss in detail about different activities associated with today's Manufacturing plants. (CO3/CO4/CO5)

(c) Explain in detail about the different types of Assembly Lines. (CO3/CO4/CO5)

5. (a) Describe in detail about the different steps involved in Assembly Line balancing with suitable examples. (CO5/CO6)

(b) Discuss in detail about different functional areas of Manufacturing Execution Systems. (CO5/CO6)

(c) Explain in detail about MESA model with its suitable functions. (CO5/CO6)

50

Roll No. .....

TME–403

B. TECH. (FOURTH SEMESTER)
END SEMESTER EXAMINATION, June, 2023

MANUFACTURING PROCESS-II

Time : Three Hours

Maximum Marks : 100

Note : (i) All questions are compulsory.

(ii) Answer any ***two*** sub-questions among (a), (b) and (c) in each main question.

(iii) Total marks in each main question are **twenty**.

(iv) Each sub-question carries 10 marks.

1. (a) In orthogonal cutting of a 60 mm diameter MS bar on lathe, the following data was obtained, Rake angle = 150, Cutting Speed = 100 m/min, Cutting Force = 200 N, Feed Force = 70 N, Chip thickness = 0.3 mm, feed rate = 0.2 mm/rev. : feed force = 60 N Calculate : (i) Shear plane angle, (ii) Coefficient of friction, (iii) Chip flow velocity, (iv) Friction Angle. (CO1, CO2)

(b) A carbide tipped tool of designation 0-10-5-5-9-90-1 mm (ORS) is used to turn a steel work piece of 50 mm diameter with a cutting speed of 240 m/min and feed 0.25 mm/rev. Refer following data : Cutting force : 180 N, Feed Force : 100 N, chip thickness : 0.32 mm. Calculate : (i) Shear angle, (ii) Shear force, (iii) Friction force, (iv) Normal force acting on shear plane. (CO1, CO2)

(c) In an orthogonal cutting operation following observation were made : Cutting speed = 25 m/min, width of cut = 2.5 mm, feed = 0.24 mm/rev. chip thickness = 0.4 mm, Cutting force = 1400 N, Thrust force = 400 N. Tool rack angle = 50 Calculate : (i) Shear Plane angle, (ii) Friction angle, (iii) Chip Velocity, (iv) Shear strain, (v) Power. (CO1, CO2)

2. (a) The following equation for tool life has been obtained for H.S.S. tool. $VT^{0.13} f^{0.6} d^{0.3} = C$. A 60 min tool life is obtained using the following cutting condition : V_0 = 40 m/min; t_0 = 0.25 mm; d_0 = 2 mm. Calculate the effect on the tool life if speed, feed and depth of cut are together increased by 25% and also they are individually increased by 25%.

(CO2, CO3)

(b) A tool life of 70 min is to be obtaining at a cutting speed of 15 m/min and 7 min at 50 m/min. Determine : (i) Taylor' tool life equation, (ii) Calculate percentage increased in tool life when cutting speed is reduced by 50%. (CO2, CO3)

(c) Calculate the spindle speed in RPM. For a HSS drill 10 mm diameter, cutting a MS plate of 20 mm thickness. Also calculate the machining time if feed is 0.18 mm/rev and cutting speed of 35 mpm (meter per minute). (CO2, CO3)

3. (a) Explain any *three* types of milling cutters in detail. (CO3)

(b) With the help of neat sketch, explain the working principle of milling machine. (CO3)

(c) Explain the nomenclature of grinding wheel in brief. (CO3)

4. (a) Two pipes of inner diameter 100 mm and outer diameter 50 mm each are joined by flash welding using 20V power supply. At the interface, 1.5 mm of material melts from each pipe which has a resistance of 20Ω. If the unit melt energy is 40 J/mm^3, then them required for welding (in seconds) is ? (CO3, CO4)

(b) Spot welding of two 2.5 mm thick sheet of steel (density = 7500 kg/m^3) is carried out successfully by passing a certain amount of current for 0.15 second through the electrodes. The resultant weld nugget formed is 15 mm in diameter and 2 mm thick. If the latent heat of fusion of steel is 1200 kJ/kg and the effective resistance in the welding operation is 150 μΩ, the current passing through the electrodes is approximately ? (CO3, CO4)

(c) Explain in details the process of thermit welding neat sketch. (CO3, CO4)

5. (a) What are the advantages of unconventional machining over conventional machining. (CO1, CO5)

(b) Explain with the help of neat sketch the Ultra sonic machining (USM). (CO1, CO5)

(c) Explain with the help of neat sketch the electro chemical machining (ECM). (CO1, CO5)

50

Roll No. .....

TME–404

B. TECH. (FOURTH SEMESTER)

END SEMESTER EXAMINATION, June, 2023

MEASUREMENT AND INSTRUMENTATION

Time : Three Hours

Maximum Marks : 100

Note : (i) All questions are compulsory.

(ii) Answer any *two* sub-questions among (a), (b) and (c) in each main question.

(iii) Total marks in each main question are **twenty**.

(iv) Each sub-question carries 10 marks.

1. (a) What are the principles of high precision measurements ? (CO1/CO2)

(b) Differentiate between accuracy and precision. (CO1/CO2)

(c) Discuss the performance characteristics and standards of measurements. (CO1/CO2)

2. (a) What are the essential conditions for obtaining (i) Interference fits and (ii) Clearance fits ? (CO2/CO4)

P. T. O.

(b) It is possible to drill a 25 mm nominal hole to an accuracy of 25 ± 0.02 mm using standard drill and drilling machine available. A shaft is to be machined to obtain a clearance fit in above hole such that allowance shall be 0.01 mm and maximum clearance should not be more than 0.08 mm. What should be the tolerance on the shaft ? (CO2/CO4)

(c) Discuss the importance of transducers and amplifiers. (CO2/CO4)

3. (a) Explain the following methods for measuring effective diameter with the help of derivation : (CO3/CO4)

(i) Two wire method

(ii) Three wire method

(b) Briefly describe the gear tooth Vernier caliper method with the help of derivation to determine the chord length and height of gear tooth.

(CO3/CO4)

(c) Discuss the following terms : (CO3/CO4)

Sensitivity, Hysteresis, Threshold, Pitch of gear, Calibration

4. (a) Explain the principle of interference. Explain how interference fringes are formed when optical flat is placed on a surface to be tested.

(CO6/CO4/CO5)

(b) Explain the terminology of screw thread with the help of neat sketch.

(CO6/CO4/CO5)

(c) (i) Write a short note on Cathode ray oscilloscope (CRO).

(ii) Differentiate between mechanical and electrical transducers.

(CO6/CO4/CO5)

5. (a) What do you mean by Analytical Balance ? Derive the expression for its sensitivity. (CO3/CO5)

(b) Explain the terminologies of screw thread. (CO3/CO5)

(c) Explain hydraulic dynamometer about discuss about different pressure gauges. (CO3/CO5)

Roll No. .....

TME–405

B. TECH. (ME) (FOURTH SEMESTER)
END SEMESTER EXAMINATION, June, 2023

KINEMATICS OF MACHINES

Time : Three Hours

Maximum Marks : 100

Note : (i) All questions are compulsory.

(ii) Answer any *two* sub-questions among (a), (b) and (c) in each main question.

(iii) Total marks in each main question are **twenty**.

(iv) Each sub-question carries 10 marks.

1. (a) Define Inversions of Single Slider Kinematic Chain with proper diagrams (any *two*). (CO1)

(b) Write difference between Machine, Mechanism and Structure. Also calculate the degree of freedom of the mechanism with six quaternary links, seven binary joints and one higher pair. Also identify the nature of kinematic chain. (CO1)

(c) Explain the terms Successfully constrained motion, Higher pair, Kinematic chain, Kinematic pair and Inversion of kinematic chain. (CO1)

P. T. O.

2. (a) A circle has OR as its diameter and a point Q lies on its circumference. Another point P lies on the line OQ produced. If OQ turns about O as centre and the product OQ × OP remains constant, show that the point P moves along a straight line perpendicular to the diameter OR. (CO2)

(b) What is the condition for correct steering ? What are the *two* main types of steering gears and discuss their relative advantages. (CO2)

(c) Explain the working of Geneva mechanism and Robert's straight line mechanism. (CO2)

3. (a) Derive an expression for tangential and normal component of acceleration. (CO3)

(b) Locate all the instantaneous centers of the slider crank mechanism as shown in figure below. The lengths of crank OB and connecting rod AB are 100 mm and 400 mm respectively. If the crank rotates clockwise with an angular velocity of 10 rad/s, find : (i) Velocity of the slider A and (ii) Angular velocity of the connecting rod AB. (CO4)

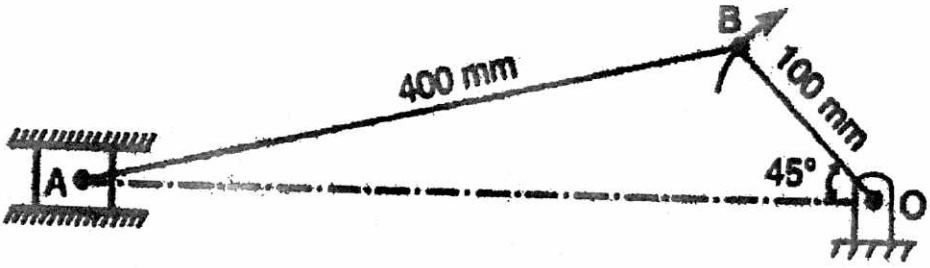

(c) The mechanism, as shown in fig. below, has the dimensions of various links as follows :

AB DE 150 mm; BC = CD = 450 mm; EF = 375 mm. The crank AB makes an angle of 45° with the horizontal and rotates about A in the clockwise direction at a uniform speed of 120 r.p.m. The lever DC

oscillates about the fixed point D, which is connected to AB by the coupler BC. The block F moves in the horizontal guides, being driven by the link EF. Determine : (i) velocity of the block F, (ii) angular velocity of DC and (iii) rubbing speed at the pin C which is 50 mm in diameter. (CO4)

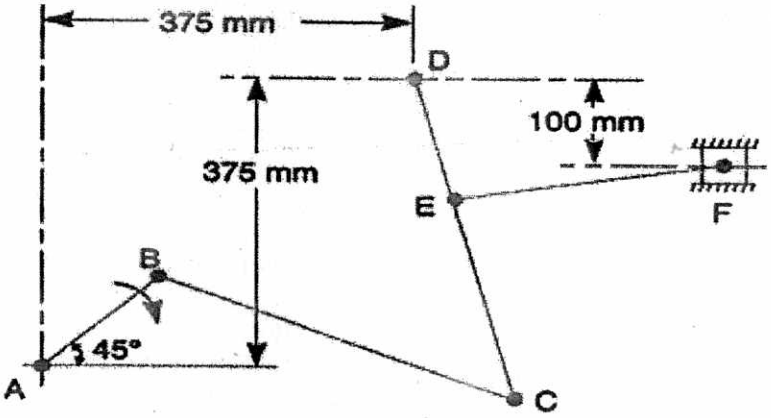

4. (a) In an epicyclic gear train, the internal wheels A and B and compound wheels C and D rotate independently about axis O. The wheels E and F rotate on pins fixed to the arm G. E gears with A and C and F gears with B and D as shown in fig. All the wheels have the same module and the number of teeth are :

$$T_C = 28;\ T_D = 26;\ T_E = T_F = 18.$$

(i) Find the number of teeth on A and B.

(ii) If the arm G makes 100 r.p.m. clockwise and A is fixed, find the speed of B. (CO5)

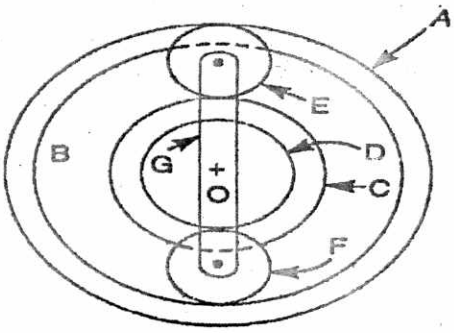

(b) Define and explain the condition for constant velocity ratio during gear meshing. (CO5)

(c) Derive the expression for the length of path of contact for two involute gears in mesh. (CO5)

5. (a) What are the different types of followers ? Explain them with diagram. (CO6)

(b) Draw the profile of a cam using a knife-edge follower with the following data :

Lift = 30 mm, Angle of ascent = 150°, Angle of dwell = 60°, Angle of descent = 100°. Angle of dwell following the descent = 50°.

The rise follows Simple Harmonic Motion (SHM) and descent is with uniform speed. Least radius of cam = 20 mm. (CO6)

(c) Design a cam for operating the exhaust valve of an oil engine. It is required to give equal uniform acceleration and retardation during opening and closing of the valve each of which corresponds to 60° of cam rotation. The valve must remain in the fully open position for 20° of cam rotation. The lift of the valve is 37.5 mm and the least radius of the cam is 40 mm. The follower is provided with a roller of radius 20 mm and its line of stroke passes through the axis of the cam. (CO6)

Roll No. .....

TME–406

B. TECH. (ME) (FOURTH SEMESTER)
END SEMESTER EXAMINATION, June, 2023

MECHANICS OF MATERIALS

Time : Three Hours

Maximum Marks : 100

Note : (i) All questions are compulsory.

(ii) Answer any *two* sub-questions among (a), (b) and (c) in each main question.

(iii) Total marks in each main question are **twenty**.

(iv) Each sub-question carries 10 marks.

1. (a) Deduce expression to determine the elongation of a trapezoidal section of uniform thickness. (CO1, CO2)

(b) A rectangular block is subjected to two perpendicular stresses of 10 MPa tension and 10 MPa compression. Determine the stresses on inclined plane at (i) 30°, (ii) 45°, (iii) 60° with the plane of compressive stress. (CO1, CO2)

(c) A bar of 24 mm diameter and 400 mm length is acted upon by an axial load of 38 kN. The elongation of the bar and change in diameter as 0.165 mm and 0.0031 mm respectively. Determine (i) Poisson's ratio and (ii) the value of the three moduli. (CO1, CO2)

P. T. O.

2. (a) A cantilever beam of 10 m span carries loads of 4 kN and 6 kN at 2 m and 6 m respectively from the fixed end along with another load of 6 kN at free end. Draw the shear force and bending moment diagram. (CO3)

(b) A 10 m long simply supported beam carries two point loads of 10 kN and 6 kN at 2 m and 9 m respectively from the left end. It also has a uniformly distributed load of 4 kN/m run for the length between 4 m and 7 m from the left end. Draw shear force and bending moment diagrams. (CO3)

(c) Draw shear force and bending moment diagram for a given beam : (CO3)

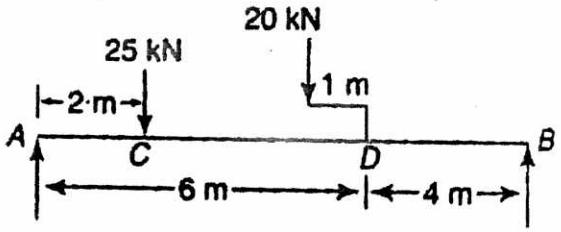

3. (a) Deduce the bending equation stating the assumptions made. (CO4)

(b) A shaft transmits 280 kW of power at 160 r.p.m. Determine :

(i) The diameter of a solid shaft to transmit the required power

(ii) The inner and outer diameter of a hollow shaft if the ratio of inner to outer diameter is 2/3

(iii) The percentage saving in the material on using hollow shaft instead of a solid shaft

Take the allowable stress as 80 MPa. (CO4)

(c) A hollow circular bar as a beam has outside diameter twice of the inside diameter. If it is subjected to a maximum bending moment of 40 kN-m

and the allowable bending stress is 100 MPa, determine the inside diameter of the bar. (CO4)

4. (a) Derive the expression for slope and deflection at the free end of a cantilever beam subjected to uniformly distributed load over the whole span of the beam. (CO4, CO5)

   (b) What assumptions are taken in the analysis of thin cylinders ? Deduce the expression for circumferential and longitudinal stresses developed in them. (CO4, CO5)

   (c) A simply supported beam of 8 m length carries two point loads of 64 kN and 48 kN at 1 m and 4 m respectively from the left-hand end. Find the deflection under each load and the maximum deflection. E = 210 GPa and $I = 180 \times 10^6$ mm^4. (CO4, CO5)

5. (a) Derive the formula for Euler's crippling load for a column subjected to one end fixed and other end free, end conditions. (CO5, CO6)

   (b) A cast-iron pipe of 750 mm diameter is used to carry water under a head of 60 m. Determine the thickness of the pipe if the permissible stress is to be 20 MPa. (CO5, CO6)

   (c) A 4 m long hollow alloy tube with inside and outside diameter as 36 mm and 48 mm elongates by 3 mm under a tensile force of 50 kN. Determine the buckling load for the tube when it is used as a column with both ends pinned and factor of safety of 5. (CO5, CO6)

50

Roll No. .....

TME–407

B. TECH. (ME) (FOURTH SEMESTER)

END SEMESTER EXAMINATION, June, 2023

FLUID MECHANICS AND FLUID MACHINES

Time : Three Hours

Maximum Marks : 100

Note : (i) All questions are compulsory.

(ii) Answer any ***two*** sub-questions among (a), (b) and (c) in each main question.

(iii) Total marks in each main question are **twenty**.

(iv) Each sub-question carries 10 marks.

1. (a) State and prove Pascal's law. (CO1)

(b) Determine the hydrostatic force and centre of pressure acting on an inclined plane surface submerged in liquid. (CO1)

(c) Determine the intensity of shear of an oil having viscosity of one poise. Oil is used for lubricating the clearance between the shaft of diameter 10 centimetre and its journal bearing. The clearance is 1.5 mm and the shaft rotates at 150 r.p.m. (CO1)

2. (a) What is continuity equation ? Derive the expression of continuity equation in 3-dimensions. (CO1)

P. T. O.

(b) What is a Venturimeter ? Derive the expression for measuring discharge through it. (CO2)

(c) In a 2-dimensional incompressible flow the fluid velocity components are given by $u = x - 4y$ and $v = -y - 4x$. Show that velocity potential exists and determine its form. Also find the stream function. (CO2)

3. (a) What is model analysis. What do you mean by dimensionless numbers ? Derive the expression for Reynolds' number, Froude's number and Mach's number. (CO3, CO4)

(b) The variables controlling the motion water are the drage force F, the speed V, to the length L, the density ρ, dynamic viscosity μ of water and acceleration due to gravity *g*. Derive an expression for F by dimensional analysis. (CO3, CO4)

(c) A pipe of diameter 1.5 m is required to transport an oil of specific gravity 0.90 and viscosity 3×10^{-2} poise at the rate of 3000 litre/s. Tests were conducted on a 15 cm dimeter pipe using water at 20°C. Find the velocity rate of flow in the model. Viscosity of water is 0.01 poise. (CO3, CO4)

4. (a) Derive the expression for Velocity distribution, Ratio of maximum velocity to average velocity and Drop off pressure for a given length of pipe for the flow of viscous fluid through a circular pipe. (Hagen-Poiseuille's law). (CO5)

(b) Derive the expression for Velocity distribution, Ratio of maximum velocity to average velocity, Drop off pressure for a given length of pipe and Shear Stress distribution for the flow of viscous fluid between two parallel plates. (CO5)

(c) Define displacement thickness, momentum thickness and energy thickness. Also derive the expression for the same. (CO5)

5. (a) What is Impulse momentum principle ? Derive the expression for the force with which a jet of water strikes a curved moving blade at the center. (CO6)

(b) What is a Hydraulic turbine ? With the help of a neat sketch, describe the construction and working of Pelton wheel turbine. (CO6)

(c) With the help of a neat sketch, explain the construction and working of a centrifugal pump. Also derive the expression for work done. (CO6)

50

Roll No. .....

TME–408

B. TECH. (FOURTH SEMESTER)

END SEMESTER EXAMINATION, June, 2023

APPLIED THERMODYNAMICS

Time : Three Hours

Maximum Marks : 100

Note : (i) All questions are compulsory.

(ii) Answer any ***two*** sub-questions among (a), (b) and (c) in each main question.

(iii) Total marks in each main question are **twenty**.

(iv) Each sub-question carries 10 marks.

1. (a) Draw the air standard diesel cycle on P-v and T-s diagram and derive an expression for its thermal efficiency. (CO2, CO4)

(b) The pressure and temperature of air at the beginning of compression in an Otto cycle is 103 kPa and 300 K, respectively. The heat added per kg of air is 1850 kJ. The compression ratio is 8. Determine maximum temperature, maximum pressure, and thermal efficiency. (CO3, CO6)

(c) Write the name of any three air standard cycles which are not being asked in this question paper. Also write the various assumptions made in the analysis of these cycles and draw P-v diagram of these cycles. (CO1, CO2)

P. T. O.

2. (a) Explain the air standard Brayton cycle with the help of its T-s diagram and show that its efficiency depends on cycle's pressure ratio. (CO2, CO4)

(b) Air enters the compressor of an air-standard Brayton cycle at 100 kPa, 27°C with a volumetric flow ratio of 5 m^3/s. The compressor pressure ratio is 10. The turbine inlet temperature is 1127° C. Determine (i) thermal efficiency of the cycle, (ii) back work ratio, (iii) net power developed in kW.

(c) Write the differences between jet and rocket propulsion systems. Also, explain the working of a turboprop propulsion system with the help of a neat diagram. (CO1, CO2)

3. (a) Explain the method of reheating and regeneration in Rankine vapour power cycle. Also discuss the effects of these methods on the cycle performance. (CO2, CO4)

(b) A steam power plant works on Rankine cycle has boiler and condenser pressures of 60 par and 0.1 bar, respectively. Steam inlet to the turbine is dry and saturated. Calculate the pump work, turbine work and thermal efficiency. (*Steam table is attached at the end of this question paper).*

(c) A steam power plant operates on ideal Rankine cycle. The steam enters the turbine at 3 MPa, 350°C and is condensed in the condenser at a pressure of 75 kPa. Determine the thermal efficiency, back work ratio and work ratio of this cycle. (CO3, CO6)

4. (a) Explain the working of a reciprocating compressor and also derive an expression for its work done. (CO3, CO5)

(b) Define the volumetric efficiency of a compressor. How is it affected by (i) pressure ratio, & (ii) clearance ratio ? Also prove that :

$$\eta_{vol} = 1 + C - C\left(\frac{p_2}{p1}\right)^{\frac{1}{n}}.$$ (CO1, CO5)

(c) A single-acting, single-cylinder reciprocating air compressor has a cylinder diameter of 0.2 m and a stroke of 0.3. Air enters the cylinder at 1 bar; 300 K. It is then compressed polytropically to 8 bar according to the law $PV^{1.3}$ = constant. If the speed of the compressor is 250 rpm, calculate the mass of air compressed per minute, and the power required in kW for driving the compressor. (CO3, CO5)

5. (a) Explain a vapour compression refrigeration system with the help of a neat diagram. Also, draw its p-h and T-s diagram. (CO2, CO4)

(b) What do you mean by refrigeration and air conditioning ? Also, define the following terms : (i) COP, (ii) Refrigeration effect (RE), (iii) Ton of Refrigeration (TR). (CO1)

(c) Explain the various psychorometric properties with the help of psychrometric chart. (CO2, CO4)